PROVIDING COMPLETE CONTROL
SOLUTIONS FOR
INDUSTRIAL PIPELINES

3 PIECE TRUNNION MOUNTED BALL VALVE

API 6D, ASME CLASS 150 - 2500#

FZV-Ref-2017. 3

FZV is a specialized supplier of API 6D, API 600, API 6A and API 16C valves and flow control components, including industrial valves and wellhead equipment.

FZV is approved by major oil and gas companies including: Shell, Vopak, CNPC, Sinopec, CNOOC, ENI, PDO, Petronas, KNPC, Sasol and Santos. Our approvals also include numerous EPC's in the oil & gas, power and mining sectors, such as Worley Parsons, Technip, Fluor, Samsung, Hyundai, JGC, and Chiyoda. We continue to work with our partners to expand our customer base due to unwavering commitment to our client needs. We strive to meet or exceed expectations. "Quality, excellence, unmatched service" is always the basis of our mission.

FZV is certified by ISO 9001, ISO 14001, OHSAS 18001, API Q1, API 6D, API 600, API 6A, ATEX, CE/PED, API 6A-PR2 and API 607.

Established in 1983, with manufacturing locations in Shanghai and Wenzhou, China, we continue to grow and have become a global leader in manufacturing high quality valves and wellhead equipment. We offer excellent customer service and excel at meeting our customers' expectations.

Growth is important to FZV, we have therefore established our own laboratory for research and development aimed at product design, innovation and validation. We have complete in house inspection facilities and test equipment to ensure that all products are of the highest quality. FZV in-house test capability includes mechanical: tensile, impact and hardness testing; NDE: PT, MT, UT; chemical: PMI; fugitive emissions; and shell type acceptance test (TAT). We simulate various tests in critical and crucial working conditions to verify product performance.

TRUNNION VALVE CATALOG INDEX

VALVE FEATURES ·····1

SEAT DESIGNS ·····2-4

PRODUCT RANGE API 6D FP AND RP ·····5

DESIGN AND TEST STANDARDS ·····5

CROSS SECTIONAL DRAWING & BOM ·····6-7

SIZES, DIMENSIONS & WEIGHTS ·····8-12

TOP WORKS ·····12-14

TORQUE VALUES ·····15

CV VALUES ·····16

PRESSURE & TEMPERATURE CHART FOR TYPICAL SEAT & SEAL MATERIALS ·····17

PART NUMBER CONFIGURATION ·····18

Catalog information is current at time of publication, subject to change without notice

FZV

The FZV series of forged 3 piece trunnion ball valves have been engineered to meet both general service and heavy duty applications including petroleum, petro-chemical, and industrial. Valves are designed in accordance with API 6D and CSA Z245.15, they are available in a variety of configurations and materials to meet your specific operational needs. Combined with our 24/36 month extended warranty, FZV valves not only meet but exceed industry standards.

FEATURES

- Valve body, closures, ball and seat carriers are manufactured from forged steel to ensure high strength, dependable service life in high pressure or severe applications.
- Available seat configurations include self-relieving (single piston effect), DIB-1 (double piston effect) and DIB-2 (single piston one side, double piston one side) options.
- DIB-1 valves are provided with drilled, tapped, plugged ports for ease of thermal relief piping as necessary.
- The primary seat design utilizes TEFLON, DEVLON or PEEK as standard dependent upon pressure class, the secondary metal seat ring will provide sealing should the primary be eliminated by fire per API 607.
- All seat rings and O-rings include graphite secondary seals to achieve firesafe requirements for API 607.
- All O-rings are anti-explosive decompression style.
- All sizes/ANSI classes are double block and bleed capable in accordance with API 6D.
- The drain valve can be utilized for block and bleed function or to check seat integrity during maintenance.
- All sizes/classes are provided with emergency stem and seat injection capabilities in the event of damage. Valves ⩾16" are provided with 2 seat injection ports. Small bore valves ⩽4" will be provided with center body cavity injection due to size constraints.
- The valves are hydro tested excluding the injection fittings as there is a buried check valve installed underneath the fittings in the valve body. Therefore, a damaged fitting can be replaced without the need to re-hydro test the valve shell (body integrity remains intact).
- Valve stems are anti-blowout, designed in accordance with API 6D to ensure body cavity pressure cannot eject stem.
- The design incorporates two springs to assure electric continuity between the stem/body/ball to eliminate static build-up.
- The mounting pad provided is standard to ISO 5211 for ease of automation.
- All valves are standard with a lockable handle or gear per API 608.

ADDITIONAL OPTIONS

- Valves are stocked as standard with ASTM A105 or A350-LF2 bodies, 3MIL ENP or 316SS trim components and polymer seats. Alternate materials can be provided based upon application specifics.
- Cryogenic designs and test capabilities are available.
- For severe service (high temperature or abrasive media), metal seated design options can be provided.
- Valves are provided with factory enamel coating, custom coating or colors can be offered based upon specific needs.
- Additional testing or documentation is available and can be offered as required.

SELF-RELIEVING, DIB-1, AND DIB-2 SEAT DESIGN

SELF-RELIEVING (SINGLE PISTON EFFECT)

For this design, the seat retains tight contact with the ball in one direction. The line pressures upstream and downstream act upon the back of the seat retainers to force each of the seat rings more tightly against the ball. In the event that the body cavity pressure exceeds either the upstream or downstream line pressure, the body pressure will create a thrust that will push the seat ring away from the ball and allow the pressure to equalize between the cavity and the line. This overpressure release can occur in either the full open or close valve position. This style of valve is fully bi-directional for installation.

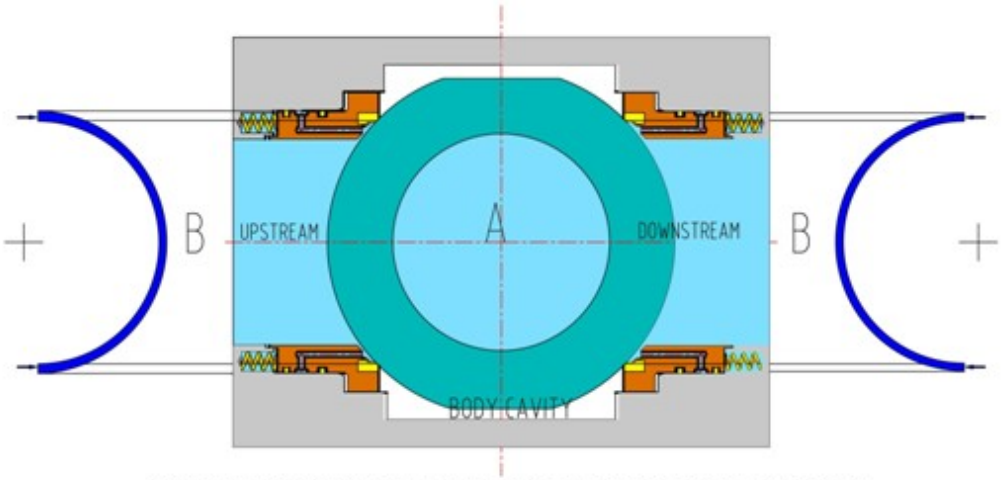

PRESSURE ACTING UPSTREAM AND/OR DOWNSTREAM
PRESSURE B>A
A=BODY CAVITY PRESSURE, B=LINE PRESSURE

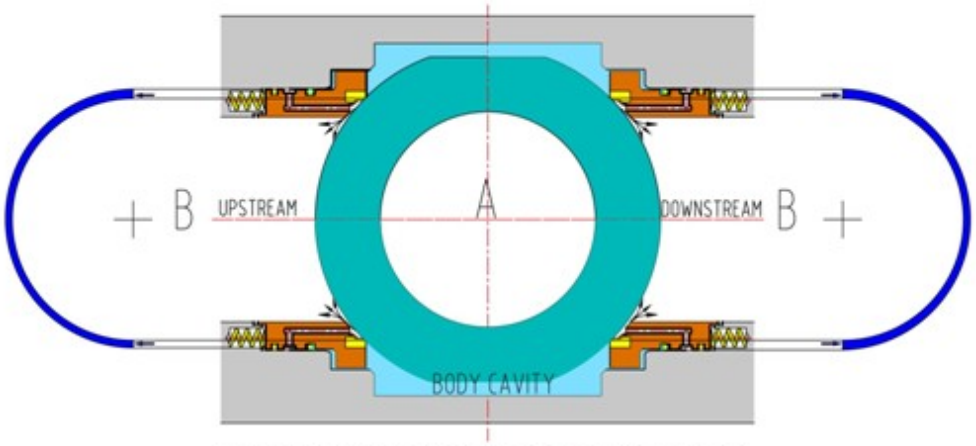

PRESSURE ACTING IN THE BODY CAVITY
PRESSURE A>B
A=BODY CAVITY PRESSURE, B=LINE PRESSURE

DIB-1 (DOUBLE PISTON EFFECT)

In the double piston effect design, the seat remains in tight contact with the ball in both directions. The line pressures upstream, downstream and in the body cavity will all act to increase the thrust forcing the seats into the ball. Therefore in full open or closed positions, the media in the body cavity will always be fully isolated from the line media. Dependent upon the application, this design of valve may require additional pressure relief devices to protect the valve in case of over-pressure of the body cavity. A common example of this requirement would be a liquid service where the media is subject to thermal expansion. This valve is also fully bi-directional for installation purposes, though if provided with cavity pressure relief piped to the flange, the valve would need to be installed so the media pressure release discharges to the upstream or downstream side based upon site requirements.

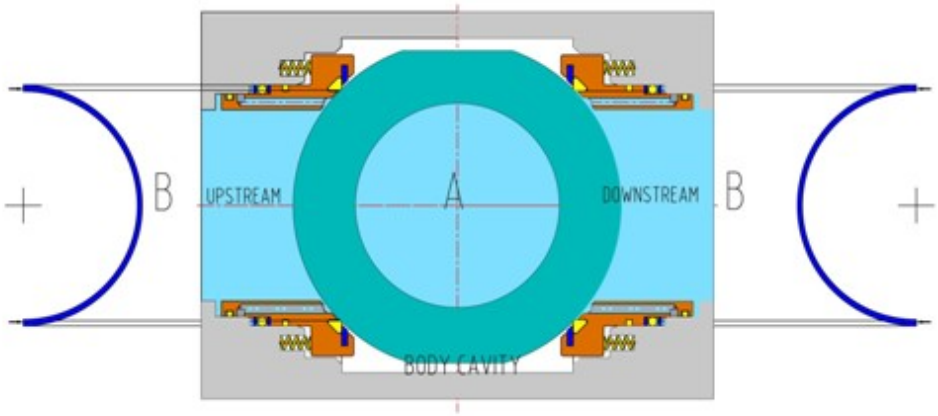

PRESSURE ACTING UPSTREAM AND/OR DOWNSTREAM
PRESSURE B>A
A=BODY CAVITY PRESSURE, B=LINE PRESSURE

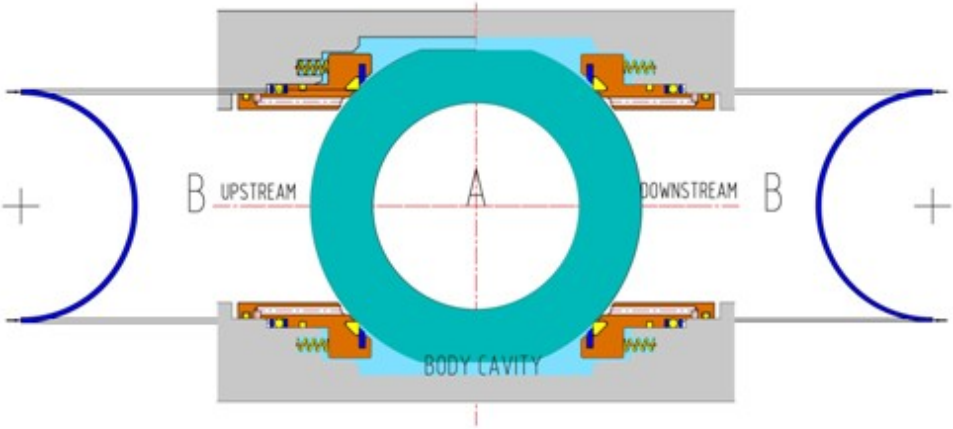

PRESSURE ACTING IN THE BODY CAVITY
PRESSURE A>B
A=BODY CAVITY PRESSURE, B=LINE PRESSURE

DIB-2 (ONE SINGLE PISTON SEAT + ONE DOUBLE PISTON EFFECT SEAT)

The DIB-2 design incorporates one of each seat in the valve construction. This will create a unidirectional valve with the double piston effect seat typically protecting the downstream line. In the case of body cavity pressure exceeding the line pressure, the single piston effect seat will allow for pressure to relieve (typically upstream) and equalize. There is no need to provide for additional pressure relief with this design, as it provides for the relief through the single piston effect seat.

PRODUCT RANGE API 6D FP AND RP

SIZE	ANSI 150	ANSI 300	ANSI 600	ANSI 900	ANSI 1500	ANSI 2500
2	●	●	●	●	●	●
3	●	●	●	●	●	●
4	●	●	●	●	●	●
6	●	●	●	●	●	●
8	●	●	●	●	●	●
10	●	●	●	●	●	●
12	●	●	●	●	●	●
14	●	●	●	●	●	
16	●	●	●	●	●	
18	●	●	●	●	●	
20	●	●	●	●	●	
24	●	●	●	●	●	
28	●	●	●	●		
30	●	●	●	●		
32	●	●	●	●		
34	●	●	●			
36	●	●	●			
40	●	●	●			
42	●	●	●			
48	●	●	●			
56	●	●	●			

DESIGN AND TEST STANDARDS

DESIGN	API 6D, CSA Z245.15, API 608, ISO 17292, CSA B51
PRESSURE/TEMPERATURE	ASME B16.34
FACE TO FACE	ASME B16.10
END FLANGES	RF/RTJ: ASME B16.5, ＞24"; B16.47/MSS SP-44, BW:B16.25
FIRESAFE	API 607
SOUR SERVICE	NACE MR0175/ISO 15156
TOP FLANGE	ISO 5211
INSPECTION	API 598
TESTING	API 6D, CSA Z245.15 (Includes High and Low Pressure Air Seat Test)
MARKING	MSS SP-25, API 6D, CSA Z245.15
QUALITY	MSS SP-55
DOCUMENTATION	BS EN 1020403.1
REGISTRATION	CRN IN PLACE FOR CANADA

Catalog information is current at time of publication, subject to change without notice

CROSS SECTIONAL DRAWING & BOM

NO.	NAME	ENP TRIM	SS316 TRIM
1	BODY	A350 LF2 CL 1	A350 LF2 CL 1
2	END CAP	A350 LF2 CL 1	A350 LF2 CL 1
3	BALL	A350 LF2 CL 1+0.075mm ENP	A182 F316
4	SEAT	A350 LF2 CL 1+0.075mm ENP	A182 F316
5	STEM	A29 4140+0.075mm ENP	A182 F316
6	SEAT RING	DEVLON	DEVLON
7	UPPER CAP	A350 LF2 CL 1+0.075mm ENP	A350 LF2 CL 1+0.075mm ENP
8	TRUNNION	A350 LF2 CL 1+0.075mm ENP	A182 F316
9	LIMIT STOP P LATE	A350 LF2 CL 1	A350 LF2 CL 1
10	SEALANT INJECTION VALVE	A350 LF2 CL 1+0.03mm ENP	A350 LF2 CL 1+0.03mm ENP
11	DRAIN VALVE	A350 LF2 CL 1+0.03mm ENP	A350 LF2 CL 1+0.03mm ENP
12	SEALANT INJECTION VALVE	A350 LF2 CL 1+0.03mm ENP	A350 LF2 CL 1+0.03mm ENP
13	SEAT SPRING	INCONEL X-750	INCONEL X-750
14	ANTISTATIC SPRING	A276 316	A276 316
15	FIRE SAFE GASKET	GRAPHITE+316SS	GRAPHITE+316SS
16	FIRE SAFE GASKET	GRAPHITE+316SS	GRAPHITE+316SS
17	FIRE SAFE GASKET	GRAPHITE+316SS	GRAPHITE+316SS
18	FIRE SAFE GASKET	GRAPHITE+316SS	GRAPHITE+316SS
19	FIRE SAFE GASKET	GRAPHITE+316SS	GRAPHITE+316SS
20	TRUNNION SEAL O-RING	HNBR-LT(AED)	HNBR-LT(AED)
21	BODY SEAL O-RING	HNBR-LT(AED)	HNBR-LT(AED)
22	SEAT SEAL O-RING	HNBR-LT(AED)	HNBR-LT(AED)
23	UPPER CAP SEAL O-RING	HNBR-LT(AED)	HNBR-LT(AED)
24	STEM SEAL O-RING	HNBR-LT(AED)	HNBR-LT(AED)
25	STUD	A320 L7M	A320 L7M
26	NUT	A194 7M	A194 7M
27	ALLEN HEAD BOLT	A320 L7M	A320 L7M
28	ALLEN HEAD BOLT	A320 L7M	A320 L7M
29	BEARING	AISI 1045+PTFE	AISI 1045+PTFE
30	BEARING	AISI 1045+PTFE	AISI 1045+PTFE
31	THRUST WASHER	RPTFE	RPTFE
32	SUPPORT FEET	A36	A36
33	CHECK VALVE	A350 LF2 CL 1+0.03mm ENP	A350 LF2 CL 1+0.03mm ENP
34	KEY	AISI 1045	AISI 1045
35	GEAR OPERATOR	ASSEMBLY	ASSEMBLY
36	PIN	AISI 1566	AISI 1566
37	PIN	AISI 1566	AISI 1566
38	STUD	A320 L7M	A320 L7M
39	NUT	A194 7M	A194 7M
40	VENT VALVE	A350 LF2 CL 1+0.03mm ENP	A350 LF2 CL 1+0.03mm ENP
41	LIFTING LUGS	A36	A36
42	ANTISTATIC BALL	A276 316	A276 316
43	ALLEN HEAD BOLT	A320 L7M	A320 L7M
44	DRILLED, TAPPED AND PLUGGED PORT *	A350 LF2 CL 1+0.03mm ENP	A350 LF2 CL 1+0.03mm ENP
45	DRILLED, TAPPED AND PLUGGED PORT *	A350 LF2 CL 1+0.03mm ENP	A350 LF2 CL 1+0.03mm ENP

NOTE: OTHER MATERIALS AVAILABLE TO SUIT SERVICE CONDITIONS.
* -ON DIB-1 VALVES ONLY.

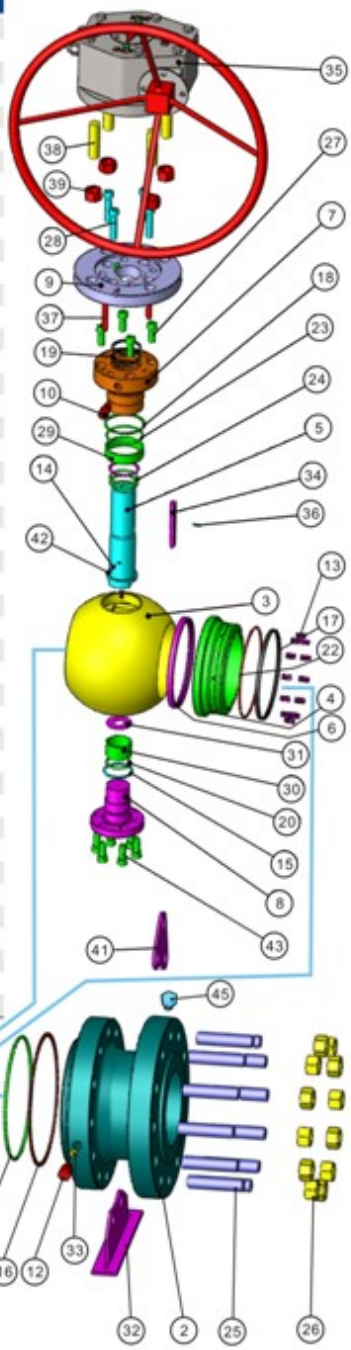

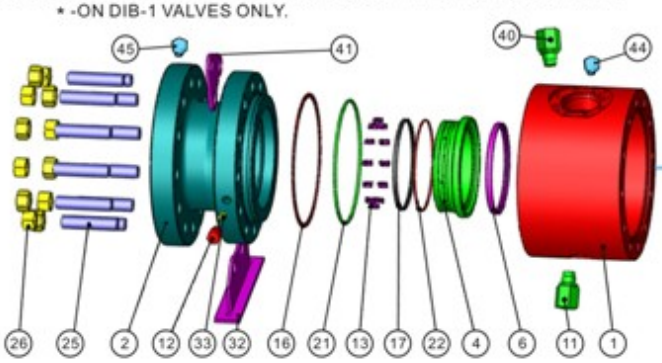

NO.	NAME	ENP TRIM	SS316 TRIM
1	BODY	A350 LF2 CL 1	A350 LF2 CL 1
2	END CAP	A350 LF2 CL 1	A350 LF2 CL 1
3	BALL	A350 LF2 CL 1+0.075mm ENP	A182 F316
4	SEAT	A350 LF2 CL 1+0.075mm ENP	A182 F316
5	UPPER CAP	A350 LF2 CL 1+0.075mm ENP	A350 LF2 CL 1+0.075mm ENP
6	TRUNNION	A350 LF2 CL 1+0.075mm ENP	A182 F316
7	SEAT RING	RPTFE(15%~20% CF)	RPTFE(15%~20% CF)
8	STEM	A29 4140+0.075mm ENP	A182 F316
9	LIMIT STOP PLATE	A350 LF2 CL 1	A350 LF2 CL 1
10	LIMIT STOP PLATE	A36+Zn	A36+Zn
11	LEVER HEAD	A216 WCB	A216+WCB
12	LEVER	AISI 1020	AISI 1020
13	INDICATUNG PLATE	A276 304	A276 304
14	KEY	AISI 1045	AISI 1045
15	FIRE SAFE GASKET	GRAPHITE+316SS	GRAPHITE+316SS
16	FIRE SAFE GASKET	GRAPHITE+316SS	GRAPHITE+316SS
17	FIRE SAFE GASKET	GRAPHITE+316SS	GRAPHITE+316SS
18	FIRE SAFE GASKET	GRAPHITE+316SS	GRAPHITE+316SS
19	FIRE SAFE PACKING	GRAPHITE+316SS	GRAPHITE+316SS
20	THRUST WASHER	RPTFE	RPTFE
21	ALLEN HEAD BOLT	A320 L7M	A320 L7M
22	ALLEN HEAD BOLT	A320 L7M	A320 L7M
23	ALLEN HEAD BOLT	A320 L7M	A320 L7M
24	HEX HEAD BOLT	304SS	304SS
25	HEX HEAD BOLT	304SS	304SS
26	NUT	A194 7M	A194 7M
27	STUD	A320 L7M	A320 L7M
28	PIN	AISI 1566	AISI 1566
29	PIN	AISI 1566	AISI 1566
30	TRUNNION SEAL O-RING	HNBR-LT(AED)	HNBR-LT(AED)
31	BODY SEAL O-RING	HNBR-LT(AED)	HNBR-LT(AED)
32	SEAT SEAL O-RING	HNBR-LT(AED)	HNBR-LT(AED)
33	UPPER CAP SEAL O-RING	HNBR-LT(AED)	HNBR-LT(AED)
34	STEM SEAL O-RING	HNBR-LT(AED)	HNBR-LT(AED)
35	BEARING	AISI 1045+PTFE	AISI 1045+PTFE
36	BEARING	AISI 1045+PTFE	AISI 1045+PTFE
37	SEAT SPRING	INCONEL X-750	INCONEL X-750
38	ANTISTATIC SPRING	A276 316	A276 316
39	DRAIN VALVE	A350 LF2 CL 1+0.03mm ENP	A350 LF2 CL 1+0.03mm ENP
40	SEALANT INJECTION VALVE	A350 LF2 CL 1+0.03mm ENP	A350 LF2 CL 1+0.03mm ENP
41	SEALANT INJECTION VALVE	A350 LF2 CL 1+0.03mm ENP	A350 LF2 CL 1+0.03mm ENP
42	CHECK VALVE	A350 LF2 CL 1+0.03mm ENP	A350 LF2 CL 1+0.03mm ENP
43	ANTISTATIC SPRING	A276 316	A276 316
44	ANTISTATIC BALL	A276 316	A276 316
45	WASHER	NYLON	NYLON
46	DRILLED, TAPPED AND PLUGGED PORT *	A350 LF2 CL 1+0.03mm ENP	A350 LF2 CL 1+0.03mm ENP
47	DRILLED, TAPPED AND PLUGGED PORT *	A350 LF2 CL 1+0.03mm ENP	A350 LF2 CL 1+0.03mm ENP

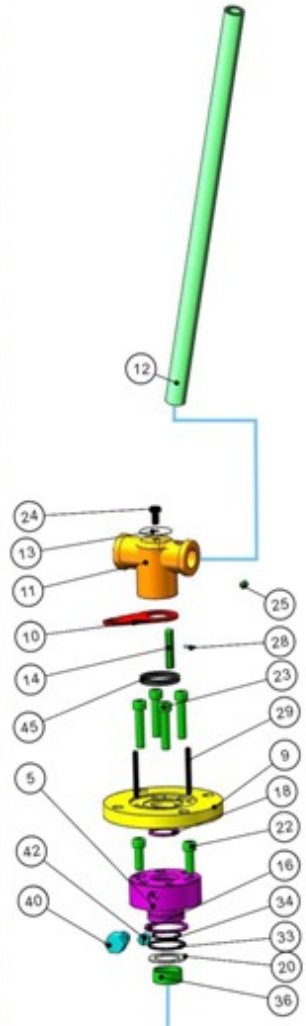

NOTE: OTHER MATERIALS AVAILABLE TO SUIT SERVICE CONDITIONS.
* -ON DIB-1 VALVES ONLY.

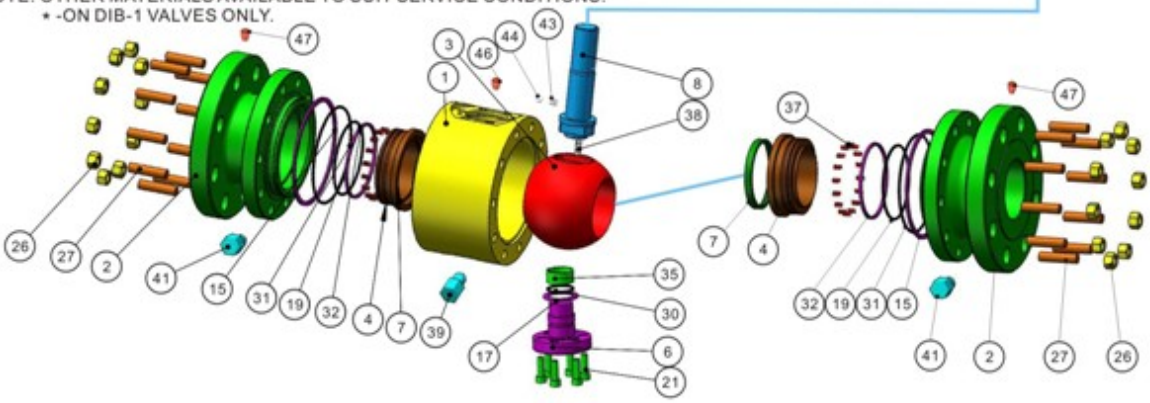

SIZES, DIMENSIONS & WEIGHTS

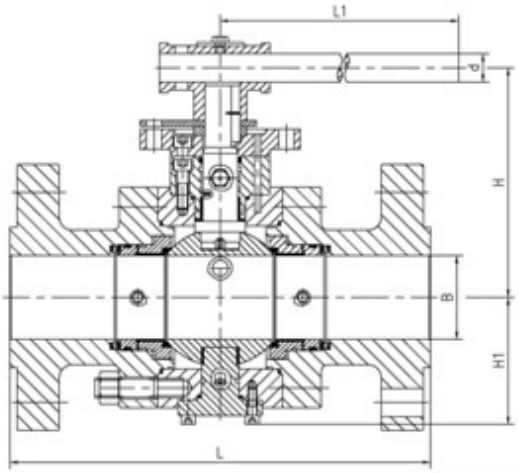

2" TO 6"LEVER OPERATED ASME CLASS 150-2500#									
SIZE IN INCHES DIMENSIONS IN MM									
ASME	SIZE	B-Port	L-RF	L-RTJ	H	H1	L1	d	WT (kg)
150	2x1-1/2	38	178	191	*	*	*	*	15
150	2	50	178	191	166	90	300	20	17
150	3x2	50	203	216	166	90	300	20	30
150	3	75	203	216	199	111	400	25	37
150	4x3	75	229	241	199	111	400	25	42
150	4	100.1	229	241	222	130	450	25	49
150	6x4	100.1	394	406	222	130	450	25	100
300	2x1-1/2	38	216	232	158	90	300	20	20
300	2	50	216	232	166	90	300	20	22
300	3x2	50	282	298	166	90	300	20	40
300	3	75	282	298	199	111	500	25	45
300	4x3	75	305	321	199	111	500	25	60
300	4	100.1	305	321	221	130	600	25	70
300	6x4	100.1	403	419	221	130	600	25	150
600	2x1-1/2	38	292	295	158	90	404	20	28
600	2	50	292	295	168	95	500	20	32
600	3x2	50	356	359	168	95	500	20	48
600	3	75	356	359	204	115	600	25	56
600	4x3	75	432	435	204	115	600	25	80
600	4	100.1	432	435	225	137	700	25	105
600	6x4	100.1	559	562	225	137	700	25	210
900	2x1-1/2	38	368	371	*	*	*	*	40
900	2	49	368	371	178	101	600	25	48
900	3x2	49	381	384	178	101	600	25	55
900	3	74	381	384	208	114	760	25	83
900	4x3	74	457	460	208	114	760	25	100
1500	2x1-1/2	38	368	371	183	104	500	25	45
1500	2	49	368	371	178	101	600	25	62
1500	3x2	49	470	473	178	101	600	25	110
1500	3	74	470	473	262	147	882	35	135
1500	4x3	74	546	549	262	147	882	35	150
2500	2	42	451	454	237	139	900	35	120
2500	3x2	42	578	584	237	139	900	35	182

Note: envelope dimensions remain the same independent of seat design.
* contact fzv for details.

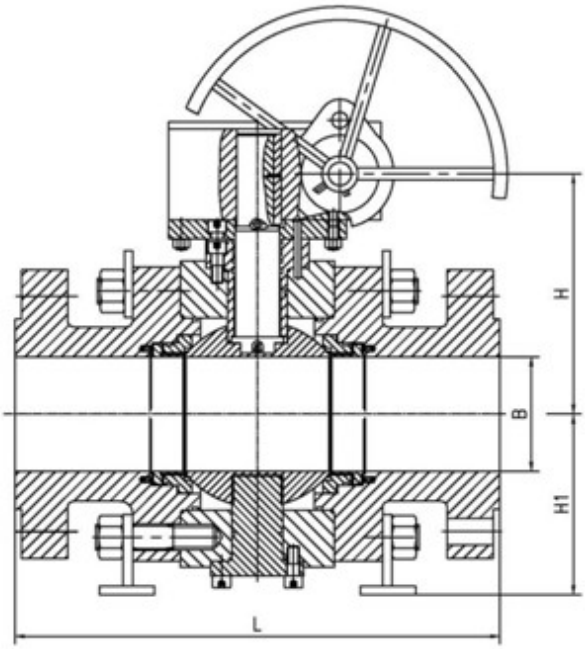

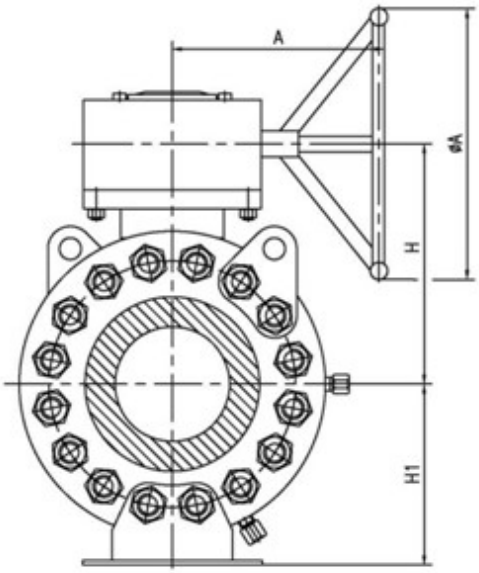

6" TO 48"GEAR OPERATED ASME CLASS 150#

SIZE IN INCHES DIMENSIONS IN MM

ASME	SIZE	B-PORT	L-RF	L-RTJ	H	H1	A	DIA A	WT (KG)
150	6	151	394	406	266	205	229	465	154
	8x6	151	457	470	266	205	229	465	218
150	8	202	457	470	315	243	360	600	270
	10x8	202	533	546	315	243	360	600	370
150	10	252	533	546	360	300	402	600	462
	12x10	252	610	622	360	300	402	600	535
150	12	303	610	622	393	335	402	600	646
	14x12	303	686	699	393	335	402	600	845
150	14	334	686	699	421	357	402	600	958
	16x14	334	762	775	421	357	402	600	1160
150	16	385	762	775	550	410	520	600	1248
	18x16	385	864	876	550	410	520	600	1350
150	18	436	864	876	640	488	543	750	1440
	20x18	436	914	927	640	488	543	750	1850
150	20	487	914	927	*	*	*	*	1960
	24x20	487	1067	1080	*	*	*	*	2540
150	24	589	1067	1080	681	617	604	750	2810
	30x24	589	1295	*	681	617	604	750	4550
150	30	735	1295	*	*	*	*	*	4850
	36x30	735	1524	*	*	*	*	*	*
150	36	874	1524	*	*	*	*	*	8950
	42x36	874	1855	*	*	*	*	*	*
150	42	1020	1855	*	*	*	*	*	14450
	48x42	1020	2134	*	*	*	*	*	*
150	48	1166	2134	*	*	*	*	*	21750

Note: envelope dimensions remain the same independent of seat design.
* contact fzv for details.

6" TO 48"GEAR OPERATED ASME CLASS 300#

SIZE IN INCHES DIMENSIONS IN MM

ASME	SIZE	B-PORT	L-RF	L-RTJ	H	H1	A	DIA A	WT (KG)
300	6	151	403	419	266	205	229	465	175
	8x6	151	502	518	266	205	229	465	238
300	8	202	502	518	315	243	360	600	327
	10x8	202	568	584	315	243	360	600	382
300	10	252	568	584	360	300	402	600	500
	12x10	252	648	664	360	300	402	600	570
300	12	303	648	664	475	345	520	600	735
	14x12	303	762	778	475	345	520	600	980
300	14	334	762	778	525	388	520	600	1162
	16x14	334	838	854	525	388	520	600	1250
300	16	385	838	854	590	422	543	750	1492
	18x16	385	914	930	590	422	543	750	1620
300	18	436	914	930	639	488	543	750	1752
	20x18	436	991	1010	639	488	543	750	1910
300	20	487	991	1010	*	*	*	*	2695
	24x20	487	1143	1165	*	*	*	*	2860
300	24	589	1143	1165	705	600	642	750	3210
	30x24	589	1397	1422	705	600	642	750	4560
300	30	735	1397	1422	*	*	*	*	5590
	36x30	735	1727	1756	*	*	*	*	7854
300	36	874	1727	1756	*	*	*	*	10280
	42x36	874	2083	*	*	*	*	*	
300	42	1020	2083	*	*	*	*	*	16300
	48x42	1020	2170	*	*	*	*	*	
300	48	1166	2170	*	*	*	*	*	24300

6" TO 48"GEAR OPERATED ASME CLASS 600#

SIZE IN INCHES DIMENSIONS IN MM

ASME	SIZE	B-PORT	L-RF	L-RTJ	H	H1	A	DIA A	WT (KG)
600	6	151	559	562	271	221	360	600	260
	8x6	151	660	664	271	221	360	600	382
600	8	202	660	664	335	280	402	600	465
	10x8	202	787	791	335	280	402	600	591
600	10	252	787	791	448	326	520	600	750
	12x10	252	838	841	448	326	520	600	856
600	12	303	838	841	520	355	543	750	1090
	14x12	303	889	892	520	355	543	750	1150
600	14	334	889	892	546	390	543	750	1335
	16x14	334	991	994	546	390	543	750	1560
600	16	385	991	994	511	420	604	750	1810
	18x16	385	1092	1095	511	420	604	750	2300
600	18	436	1092	1095	*	*	*	*	2500
	20x18	436	1194	1200	*	*	*	*	2750
600	20	487	1194	1200	664	543	660	750	3000
	24x20	487	1397	1407	664	543	660	750	4150
600	24	589	1397	1407	*	*	*	*	5000
	30x24	589	1651	1664	*	*	*	*	6100
600	30	735	1651	1664	*	*	*	*	7570
	36x30	735	2083	2099	*	*	*	*	9266
600	36	874	2083	2099	*	*	*	*	13530
	42x36	874	2437	2437	*	*	*	*	
600	42	1020	2437	2437	*	*	*	*	21590
	48x42	1020	2540	2540	*	*	*	*	
600	48	1166	2540	2540	*	*	*	*	31550

Note: envelope dimensions remain the same independent of seat design.
* contact fzv for details.

4" TO 30"GEAR OPERATED ASME CLASS 900#

SIZE IN INCHES DIMENSIONS IN MM

ASME	SIZE	B-PORT	L-RF	L-RTJ	H	H1	A	DIA A	WT (KG)
900	4	100	457	460	234	200	229	465	127
	6x4	100	610	613	234	200	229	465	240
900	6	150	610	613	283	242	402	600	305
	8x6	150	737	740	283	242	402	600	480
900	8	201	737	740	420	283	520	600	560
	10x8	201	838	841	420	283	520	600	750
900	10	252	838	841	500	320	543	750	858
	12x10	252	965	968	500	320	543	750	1050
900	12	303	965	968	467	355	604	750	1343
	14x12	303	1029	1038	467	355	604	750	1520
900	14	322	1029	1038	*	*	*	*	1610
	16x14	322	1130	1140	*	*	*	*	1850
900	16	373	1130	1140	573	477	643	750	2525
	18x16	373	1219	1232	*	*	*	*	2690
900	18	423	1219	1232	*	*	*	*	2870
	20x18	423	1321	1334	*	*	*	*	2950
900	20	471	1321	1334	*	*	*	*	3480
	24x20	471	1549	1568	*	*	*	*	3600
900	24	570	1549	1568	*	*	*	*	7030
	30x24	570	1880	1902	*	*	*	*	10200
900	30	712	1880	1902	*	*	*	*	12440

4" TO 24"GEAR OPERATED ASME CLASS 1500#

SIZE IN INCHES DIMENSIONS IN MM

ASME	SIZE	B-PORT	L-RF	L-RTJ	L-WE	H	H1	A	DIA A	WT (KG)
1500	4	100	546	549	546	261	209	360	600	195
	6x4	100	705	711	705	261	209	360	600	410
1500	6	144	705	711	705	429	270	520	600	461
	8x6	144	832	841	832	429	270	520	600	560
1500	8	192	832	841	832	509	320	543	750	640
	10x8	192	991	1001	991	509	320	543	750	930
1500	10	239	991	1001	991	481	382	604	750	1210
	12x10	239	1130	1146	1130	481	382	604	750	1356
1500	12	287	1130	1146	1130	*	*	*	*	1592
	14x12	287	1257	1276	1257	*	*	*		1830
1500	14	315	1257	1276	1257	*	*	*	*	2260
	16x14	315	1384	1406	1384	*	*	*	*	2560
1500	16	360	1384	1406	1384	*	*	*	*	3760
	18x16	360	1537	1559	1537	*	*	*	*	5554
1500	18	406	1537	1559	1537	*	*	*	*	6400
	20x18	406	1664	1686	1664	*	*	*	*	7521
1500	20	454	1664	1686	1664	*	*	*	*	8060
	24x20	454	1944	1972	*	*	*	*	*	10922
1500	24	546	1944	1972	*	*	*	*	*	14550

Note: envelope dimensions remain the same independent of seat design.
* contact fzv for details.

Catalog information is current at time of publication, subject to change without notice

3" TO 12"GEAR OPERATED ASME CLASS 2500#										
SIZE IN INCHES DIMENSIONS IN MM										
ASME	SIZE	B-PORT	L-RF	L-RTJ	L-WE	H	H1	A	DIA A	WT (KG)
2500	3	62	578	584	578	251	187	360	600	215
	4x3	62	673	683	673	251	187	360	600	275
2500	4	87	673	683	673	288	240	402	600	389
	6x4	87	914	927	914	288	240	402	600	526
2500	6	131	914	927	914	*	*	*	*	1524
	8x6	131	1022	1038	1022	*	*	*	*	1623
2500	8	179	1022	1038	1022	*	*	*	*	1880
	10x8	179	1270	1292	1270	*	*	*	*	2421
2500	10	223	1270	1292	1270	*	*	*	*	3140
	12x10	223	1422	1444	1422	*	*	*	*	3536
2500	12	265	1422	1444	1422	*	*	*	*	4260

Note: envelope dimensions remain the same independent of seat design.
* contact fzv for details.

TOP WORKS DIMENSIONS

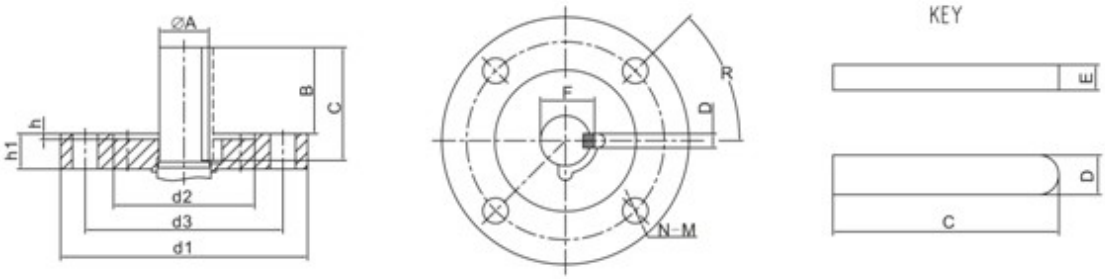

ASME CLASS 150														SIZE IN INCHES, DIMENSIONS IN MM
NPS	A	B	C	D	E	F	ISO	d1	d2	d3	N-M	h	h1	R
2"	26	35	45	8	7	29	F10	125	70	102	4-Φ12	3	14	45°
3"	30	40	50	8	7	33	F12	150	85	125	4-Φ14	3	17	45°
4"	35	41	56	10	8	38	F12	150	85	125	4-Φ14	4	21	45°
6"	47	79	100	14	9	50.5	F16	210	130	165	4-Φ22	6	24.5	45°
8"	52	88	110	16	10	56	F16	210	130	165	4-Φ23	6	24.5	45°
10"	62	85	110	18	11	66	F25	300	200	254	8-Φ18	6	25	22.5°
12"	62	88	110	18	11	66	F25	300	200	254	8-Φ18	6	25.5	22.5°
14"	72	94	120	20	12	76.5	F25	300	200	254	8-Φ18	6	25	22.5°
16"	72	116	140	20	12	76.5	F25	300	200	254	8-Φ18	6	26.5	22.5°
18"	80	120	150	22	14	85	F25	300	200	254	8-Φ18	6	28	22.5°
20"	90	120	150	25	14	95	F25	300	200	254	8-Φ18	6	28	22.5°
24"	105	130	165	28	16	111	F30	350	230	298	8-Φ22	6	25	22.5°
30"	*	*	*	*	*	*	*	*	*	*	*	*	*	
36"	*	*	*	*	*	*	*	*	*	*	*	*	*	
42"	*	*	*	*	*	*	*	*	*	*	*	*	*	
48"	*	*	*	*	*	*	*	*	*	*	*	*	*	

Note: topworks dimensions remain the same independent of seat design.
* contact fzv for details.

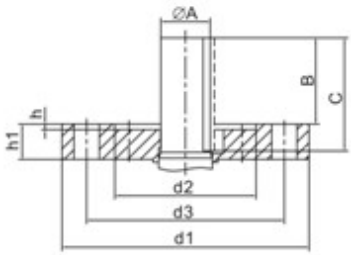

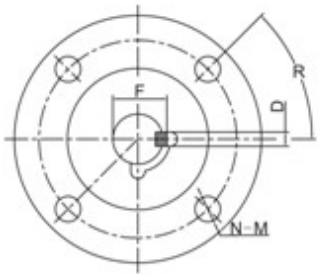

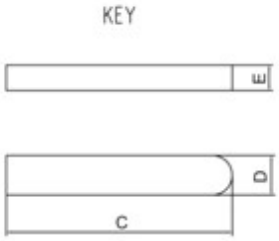

ASME CLASS 300														SIZE IN INCHES, DIMENSIONS IN MM
NPS	A	B	C	D	E	F	ISO	d1	d2	d3	N-M	h	h1	R
2x1 1/2"	20	29.5	40	6	6	22.5	F10	125	70	102	4-Φ12	*	14	45°
2"	26	35	45	8	7	29	F10	125	70	102	4-Φ12	3	14	45°
3"	30	40	50	8	7	33	F12	150	85	125	4-Φ14	3	17	45°
4"	35	41	56	10	8	38	F12	150	85	125	4-Φ14	4	20	45°
6"	47	79	100	14	9	50.5	F16	210	130	165	4-Φ22	6	24.5	45°
8"	52	88	110	16	10	56	F16	210	130	165	4-Φ23	6	24.5	45°
10"	62	85	110	18	11	66	F25	300	200	254	8-Φ18	6	25	22.5°
12"	62	88	110	18	11	66	F25	300	200	254	8-Φ18	6	25.5	22.5°
14"	72	100	130	20	12	76.5	F25	300	200	254	8-Φ18	6	30	22.5°
16"	72	116	140	20	12	76.5	F25	300	200	254	8-Φ18		26.5	22.5°
18"	80	110	140	22	14	85	F25	300	200	254	8-Φ18	6	28	22.5°
20"	*	*	*	*	*	*	*	*	*	*	*	*	*	
24"	105	130	165	28	16	111	F35	415	260	356	8-Φ33	6	32	22.5°
30"	*	*	*	*	*	*	*	*	*	*	*	*	*	
36"	*	*	*	*	*	*	*	*	*	*	*	*	*	
42"	*	*	*	*	*	*	*	*	*	*	*	*	*	
48"	*	*	*	*	*	*	*	*	*	*	*	*	*	

ASME CLASS 600														SIZE IN INCHES, DIMENSIONS IN MM
NPS	A	B	C	D	E	F	ISO	d1	d2	d3	N-M	h	h1	R
2"	26	35	45	8	7	29	F10	125	70	102	4-Φ12	3	14	45°
3"	30	40	50	8	7	33	F12	150	85	125	4-Φ14	3	17	45°
4"	35	41	56	10	8	38	F12	150	85	125	4-Φ14	4	20	45°
6"	47	79	100	14	9	50.5	F16	210	130	165	4-Φ22	6	24.5	45°
8"	52	88	110	16	10	56	F25	300	200	254	8-Φ18	6	24.5	22.5°
10"	62	85	110	18	11	66	F25	300	200	254	8-Φ18	6	25	22.5°
12"	72	117	140	20	12	76.5	F25	300	200	254	8-Φ18	6	24.5	22.5°
14"	85	117	140	22	14	90	F30	350	230	298	8-Φ22	6	25	22.5°
16"	92	133	160	25	14	97	F30	350	230	298	8-Φ22	6	24.5	22.5°
18"	*	*	*	*	*	*	*	*	*	*	*	*	*	
20"	110	130	165	28	16	116	F35	415	260	356	8-Φ33	6	45	22.5°
24"	*	*	*	*	*	*	*	*	*	*	*	*	*	
30"	*	*	*	*	*	*	*	*	*	*	*	*	*	
36"	*	*	*	*	*	*	*	*	*	*	*	*	*	
42"	*	*	*	*	*	*	*	*	*	*	*	*	*	
48"	*	*	*	*	*	*	*	*	*	*	*	*	*	

Note: topworks dimensions remain the same independent of seat design.
* contact fzv for details.

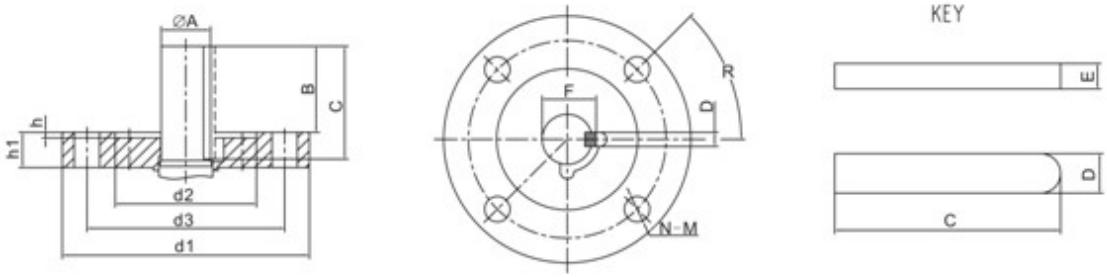

ASME CLASS 900														SIZE IN INCHES, DIMENSIONS IN MM
NPS	A	B	C	D	E	F	ISO	d1	d2	d3	N-M	h	h1	R
2"	26	36	50	8	7	29	F12	150	85	125	4-Φ14	4	23	45°
3"	30	41	55	8	7	33	F12	150	85	125	4-Φ14	4	24	45°
4"	35	61	80	10	8	38	F14	175	100	140	4-Φ18	5	25	45°
6"	47	78	100	14	9	50.5	F25	300	200	254	8-Φ18	6	28	22.5°
8"	72	78	100	20	12	76.5	F25	300	200	254	8-Φ18	6	31	22.5°
10"	72	76	100	20	12	76.5	F25	300	200	254	8-Φ18	6	25	22.5°
12"	90	120	150	25	14	95	F25	300	200	254	8-Φ18	6	25	22.5°
14"	*	*	*	*	*	*	*	*	*	*	*	*	*	
16"	115	170	210	32	18	122	F35	415	260	356	8-Φ33	6	40	22.5°
18"	*	*	*	*	*	*	*	*	*	*	*	*	*	
20"	*	*	*	*	*	*	*	*	*	*	*	*	*	
24"	*	*	*	*	*	*	*	*	*	*	*	*	*	
30"	*	*	*	*	*	*	*	*	*	*	*	*	*	

ASME CLASS 1500														SIZE IN INCHES, DIMENSIONS IN MM
NPS	A	B	C	D	E	F	ISO	d1	d2	d3	N-M	h	h1	R
2"	26	36	50	8	7	29	F12	150	85	125	4-Φ14	4	23	45°
3"	38	61	75	10	8	41	F16	210	130	165	4-Φ22	*	29	45°
4"	47	79	100	14	9	50.5	F16	210	130	165	4-Φ22	6	31.5	45°
6"	57	83	105	16	10	61	F25	300	200	254	8-Φ18	6	40	22.5°
8"	80	120	149	22	14	85	F25	300	200	254	8-Φ18	6	43.5	22.5°
10"	95	130	160	25	14	100	F30	350	230	298	8-Φ23	6	45.5	22.5°
12"	*	*	*	*	*	*	*	*	*	*	*	*	*	
16"	*	*	*	*	*	*	*	*	*	*	*	*	*	
18"	*	*	*	*	*	*	*	*	*	*	*	*	*	
20"	*	*	*	*	*	*	*	*	*	*	*	*	*	
24"	*	*	*	*	*	*	*	*	*	*	*	*	*	

ASME CLASS 2500													SIZE IN INCHES, DIMENSIONS IN MM
NPS	A	B	C	D	E	F	ISO	d1	d2	d3	N-M	h	h1
2"	35	43	60	10	8	38	F16	210	130	165	4-Φ22	*	30
3"	42	68	90	12	8	45	F16	210	130	165	4-Φ22	6	31
4"	52	79	100	16	10	56	F25	285	200	254	8-Φ18	6	35
6"	*	*	*	*	*	*	*	*	*	*	*	*	*
8"	*	*	*	*	*	*	*	*	*	*	*	*	*
10"	*	*	*	*	*	*	*	*	*	*	*	*	*
12"	*	*	*	*	*	*	*	*	*	*	*	*	*

Note: topworks dimensions remain the same independent of seat design.
* contact fzv for details.

TORQUE VALUES

SIZE (INCH)	OPEN TORQUE AT MAX. PRESSURE					
	150#	300#	600#	900#	1500#	2500#
1.5"	33	45	86	130	195	259
2"	41	68	135	211	230	446
3"	54	86	222	365	513	802
4"	113	180	393	570	941	1588
6"	325	522	855	1325	2420	4950
8"	612	1197	1845	3078	5215	7798
10"	941	1987	2655	4703	9936	14732
12"	1368	2357	3758	7695	14175	30690
14"	1796	3352	5850	13680		
16"	2820	4752	7952	18383	27000	
18"	3150	5310	9207	22756	29153	
20"	4185	7605	11520	26100	56286	
24"	5901	11200	19121	40500	92250	
28"	10278	19620	30060	52470		
30"	12357	26343	37980	81000		
36"	21780	41094	58662			
42"	32445	68832	111933			
48"	35793	78714	125370			

REMARK:

1. Torque values above are for new valves in clean water service.
2. Torque values are in newton meters, excluding safety factor.
3. Required safety factor is 1.35.
4. For unclean service, additional safety factor of 30% is required.
5. For dry gas service, additional safety factor of 50% is required.
6. Torques reflect valve bore, for RP select appropriate bore size.
7. Torques above are based upon standard seat insert offerings. Class 150 & 300: PTFE; class 600, 900 and 1500: DEVLON; class 2500: PEEK. Consult factory for torques for differing seat materials.

CV VALUES

FULL BORE						
SIZE(IN)	150#	300#	600#	900#	1500#	2500#
2	647	647	647	599	582	412
3	2086	2086	2086	1932	1879	1268
4	2694	2694	2694	2494	2426	1766
6	6062	6062	6062	5612	5030	4004
8	10885	10885	10885	10077	8943	7476
10	17109	17109	17109	15840	13857	11603
12	24734	24734	24734	22990	19982	16385
14	30055	30055	30055	25862	24071	
16	39934	39934	39934	34703	31440	
18	51214	51214	51214	44630	39988	
20	63896	63896	63896	53333	50002	
24	96465	96465	96465	81039	72321	
30	145588	145588	145588	129948		
36	211092	211092	211092			
42	280946	280946	280946			
48	383846	383846	383846			

REDUCED BORE						
SIZE(IN)	150#	300#	600#	900#	1500#	2500#
2x1 1/2	306	306	306	306	306	300
3x2	377	377	377	377	377	347
4x3	1043	1043	1043	1043	1043	681
6x4	1587	1587	1587	1587	1353	953
8x6	4364	4364	4364	4364	4065	3197
10x8	7495	7495	7495	7495	6986	6057
12x10	13470	13470	13470	13470	12171	10999
14x12	24702	24702	24702	22276	20780	
16x14	27737	27737	27737	25275	24551	
18x16	34740	34740	34740	32387	31002	
20x18	47739	47739	47739	45666	41158	
24x20	49304	49304	49304	46021	43687	
30x28	96762	96762	96762	94231		
36x30	119199	119199	119199			
42x36	180836	180836	180836			
48x42	267636	267636	267636			

PRESSURE & TEMPERATURE CHART FOR TYPICAL SEAT & SEAL MATERIALS

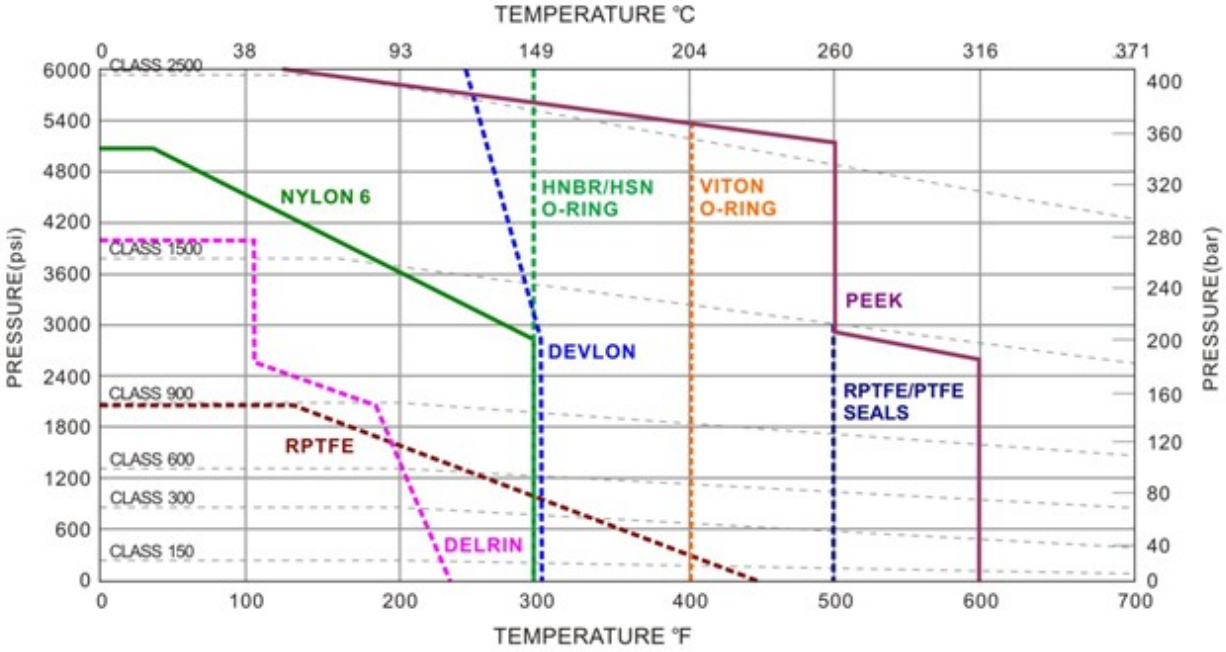

CONSULT ASME 16.34 FOR SPECIFIC MATERIAL PRESSURE/TEMPERATURE RATINGS.

PART NUMBER CONFIGURATION

T	B3	F	160	R	06	N	G	6	4	4	B	H
1	2	3	4	5	6	7	8	9	10	11	12	13

1-VALVE TYPE

T=Trunnion DBB
T1=Trunnion DIB-1
T2=Trunnion DIB-2
F=Floating

2-BODY CONSTRUCTION

B2=Bolted 2 piece
B3=Bolted 3 piece
TE=Top Entry
WB=Welded Body

3-PORT TYPE

F=Full Bore
R=Reduced Bore

4-NOMINAL SIZE

050=1/2"
075=3/4"
10=1"
15=1 1/2"
20=2"
25=2 1/2"
30=3"
40=4"
60=6"
80=8"
100=10"
120=12"
140=14"
160=16"
180=18"
200=20"
240=24"
260=26"
280=28"
300=30"
320=32"
360=36"
420=42"
480=48"

5-CONNECTION

R-RF
B-BW
J-RTJ

6-PRESSURE

01=150
03=300
06=600
09=900
15=1500
25=2500

7-SERVICE

L=Low Temp. NACE
N=Regular Temp. NACE
A=Corrosive NACE
R=Regular Temp.
O=Oxygen
C=Cryogenic
H=High Temp.

8-TOP WORKS

G=Gear
L=Lever
B-Bare Stem
A-Actuator

9-BODY MATERIAL

1=A216 WCB
2=A105N
3=LCC
4=LF2
5=CF8M
6=F316
7=Duplex
8=Super Duplex
X=Special

10-BALL MATERIAL

1=A105N+ENP
2=LF2+ENP
3=4140+ENP
4=F316
5=F6A
6=F51
7=F53
8=F55
X=Special

11-STEM MATERIAL

1=A105N+ENP
2=LF2+ENP
3=4140+ENP
4=F316
5=F6A
6=F51
7=F53
8=F55
X=Special

12-SEAT MATERIAL

A=RPTFE
B=Devlon V
C=PEEK
D=Nylon
E=Delrin
F=Metal
X=Special

13-SEAL MATERIAL

A=Viton GLT
V=Viton
H=HNBR
L=HNBR-LT
E=PTFE+Elgiloy Spring
G=Graphite
T=Teflon
X=Special

FZV GROUP CO., LTD

Add: Heyi Ind.Zone, Oubei Town, Wenzhou City, China 325102
Tel: 0577-6735 6515 Fax: 0577-6735 8449

E-mail: fzvalve@china-fzv.com